DRG NO. 5020123

3RD ANGLE PROJECTION

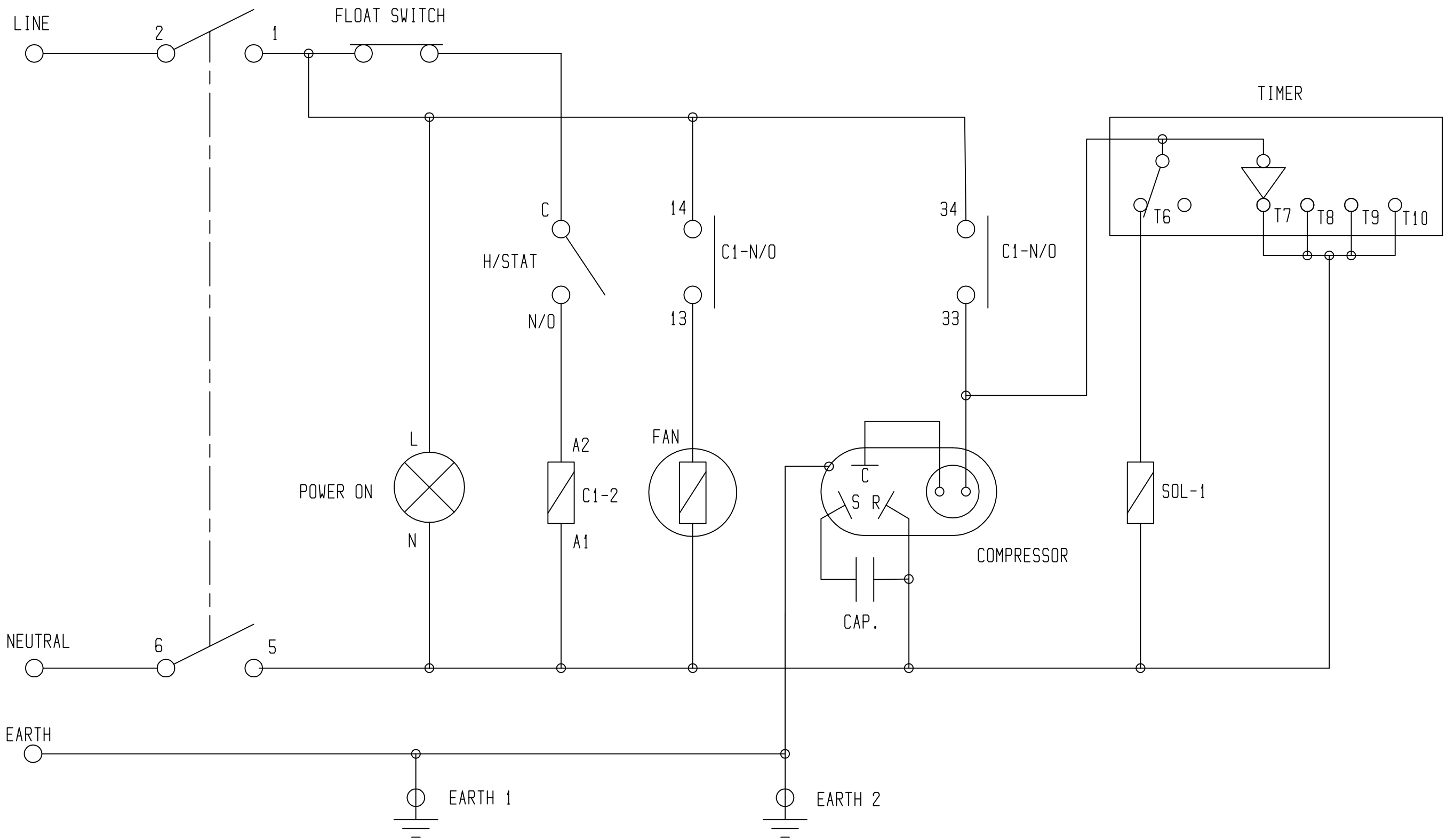

DRAWN G.ELSBURY	ISS.	5	6									
CHECKED	DATE	06:06:90	02:05:91									
APPROVED												
SCALE	C/N		1977									

INSPECTION PROCEDURE

MATERIAL

FINISH

TOLERANCE UNLESS STATED

DIMENSIONS IN m.m.

Ebac Limited

TITLE
WIRING SCHEMATIC FOR
CD100

SECURITY CLASSIFICATION

DRG.NO.
5020123

A3